MODULE III – DC Generator, DC Motor and BLDC Motor

DC GENERATOR

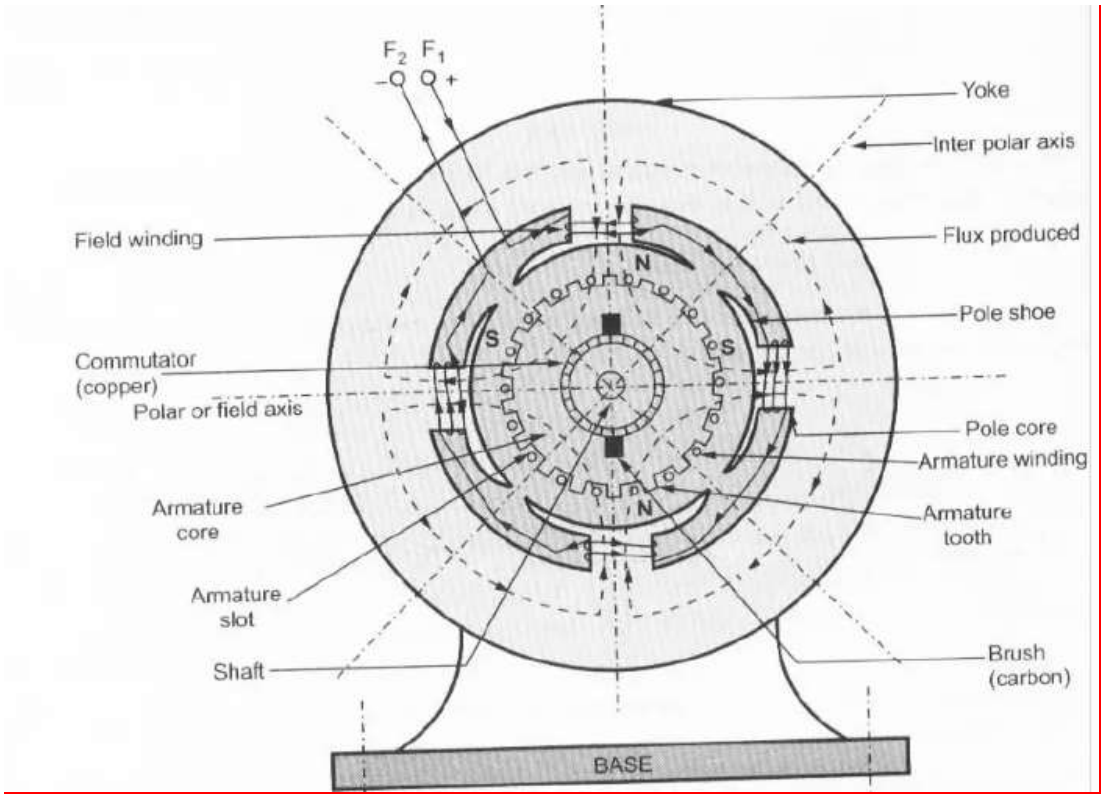

Armature:

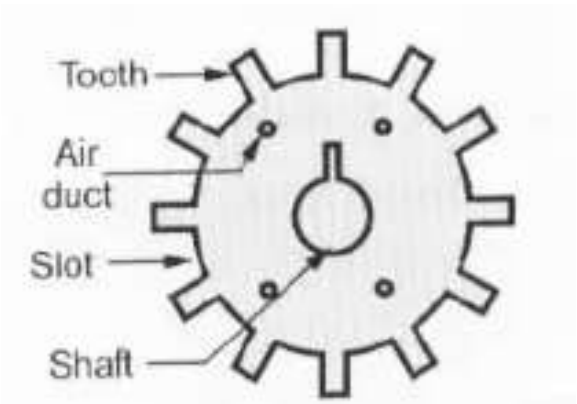

Commutator

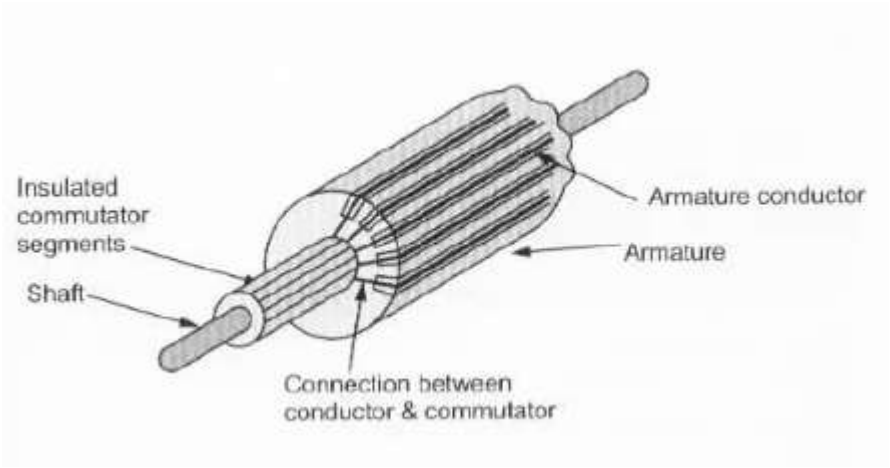

Types of Armature Winding

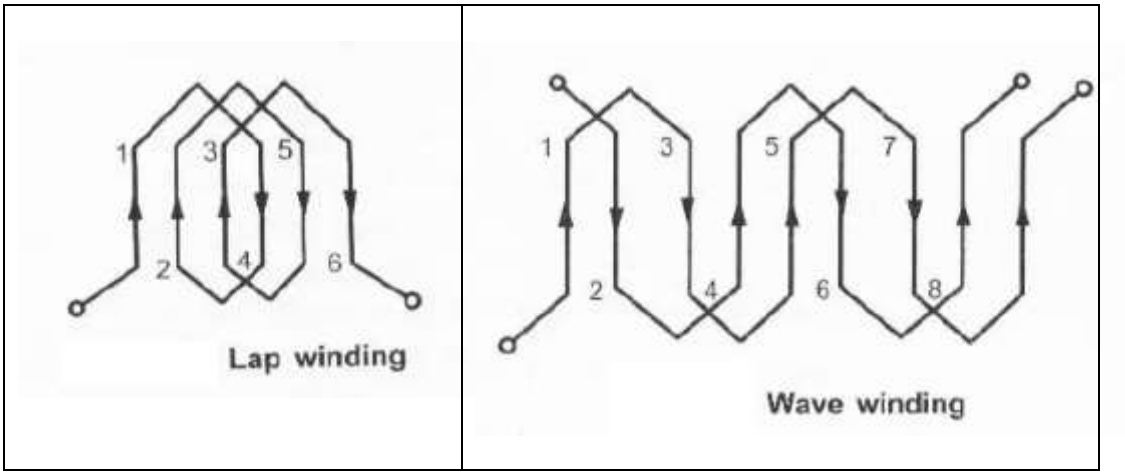

1.8 E.M.F. Equation of D.C. Generator

Let P = Number of poles of the generator

ϕ = Flux produced by each pole in webers (Wb)

N = Speed of armature in r.p.m.

Z = Total number of armature conductors

A = Number of parallel paths in which the 'Z' number of conductors are divided

So $A = P$ for lap type of winding

$A = 2$ for wave type of winding

Now e.m.f. gets induced in the conductor according to Faraday's law of electromagnetic induction. Hence average value of e.m.f. induced in each armature conductor is,

$$e = \text{Rate of cutting the flux} = \frac{d\phi}{dt}$$

Now consider one revolution of conductor. In one revolution, conductor will cut total flux produced by all the poles i.e. $\phi \times P$. While time required to complete one revolution is $\frac{60}{N}$ seconds as speed is N r.p.m.

$$\therefore \quad e = \frac{\phi P}{\frac{60}{N}} = \phi P \frac{N}{60}$$

This is the e.m.f. induced in one conductor. Now the conductors in one parallel path are always in series. There are total Z conductors with A parallel paths, hence $\frac{Z}{A}$ number of conductors are always in series and e.m.f. remains same across all the parallel paths.

$\therefore$ Total e.m.f. can be expressed as,

$$E = \phi P \frac{N}{60} \times \frac{Z}{A} \quad \text{volts}$$

This is nothing but the e.m.f. equation of a d.c. generator.

So

$$\boxed{E = \frac{\phi P N Z}{60 A} \quad \text{e.m.f. equation}}$$

$$E = \frac{\phi N Z}{60} \quad \text{for lap type as } A = P$$

$$E = \frac{\phi P N Z}{120} \quad \text{for wave type as } A = 2$$

Symbolic Representation of D.C. Generator

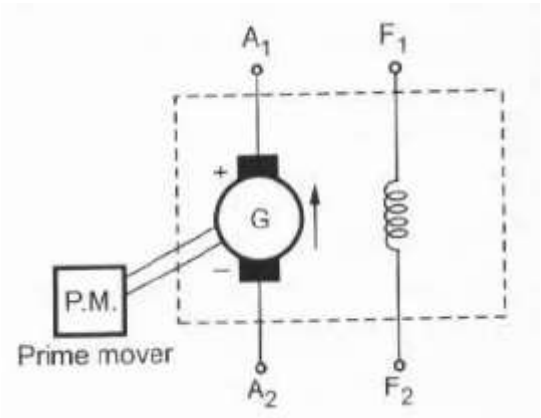

Types of Generators

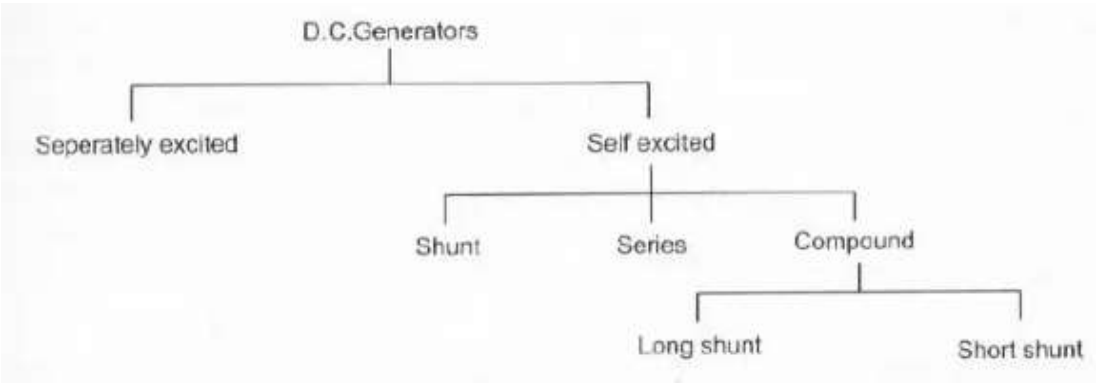

Separately Excited Generator

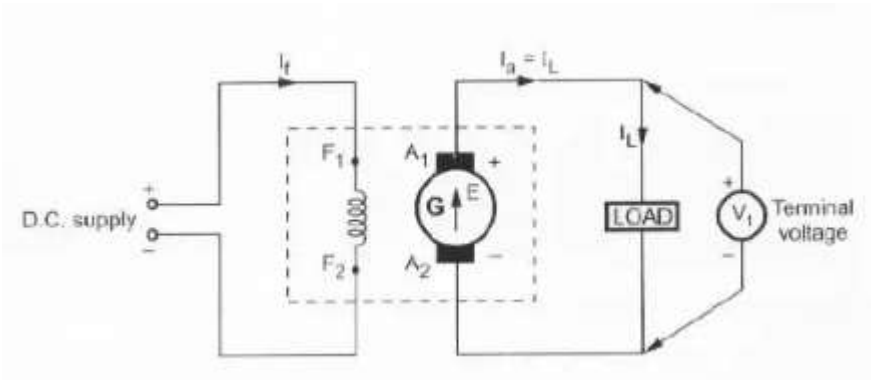

i) Terminal voltage V_t

ii) Armature resistance drop $I_a R_a$

iii) Brush contact drop V_{brush}.

So voltage equation for separately excited generator can be written as,

$$E = V_t + I_a R_a + V_{brush}$$

where $$E = \frac{\phi P N Z}{60 A}$$

Generally V_{brush} is neglected as is negligible compared to other voltages.

Self Excited Generator

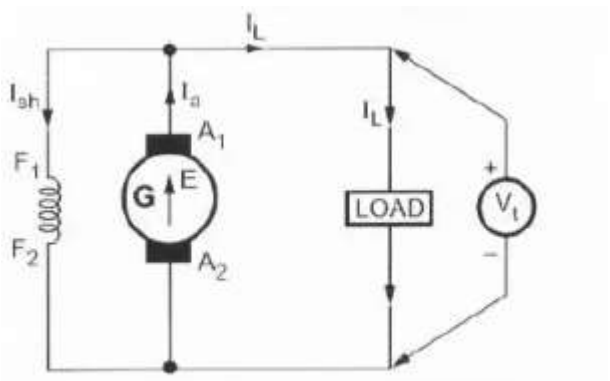

Shunt generator

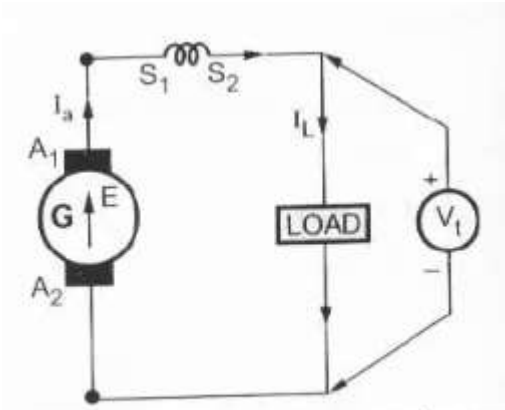

Series generator

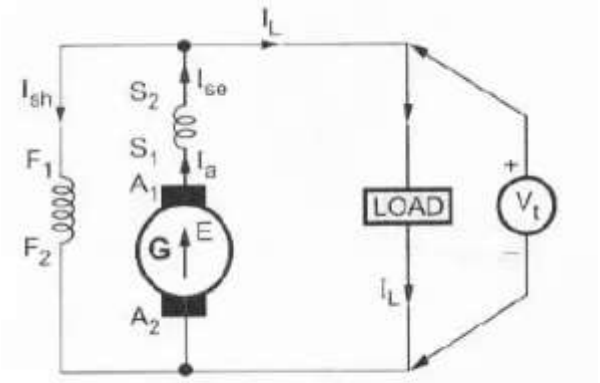

Compound Generator

Applications of Various Types of Generators

Separately Excited Generators :

As a separate supply is required to excite field, the use is restricted to some special applications like electro-plating, electro-refining of materials etc.

Shunt Generators :

Commonly used in battery charging and ordinary lighting purposes.

Series Generators :

Commonly used as boosters on d.c. feeders, as a constant current generators for welding generator and arc lamps.

DC Motor:

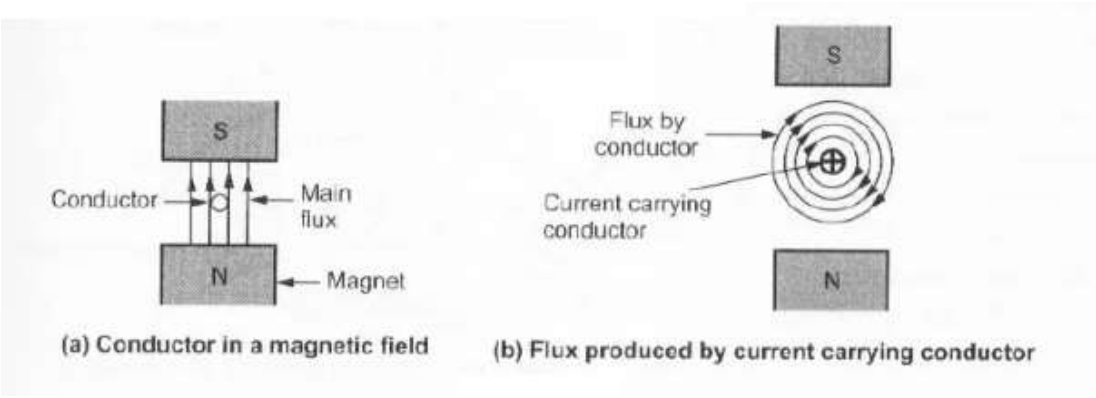

(a) Conductor in a magnetic field (b) Flux produced by current carrying conductor

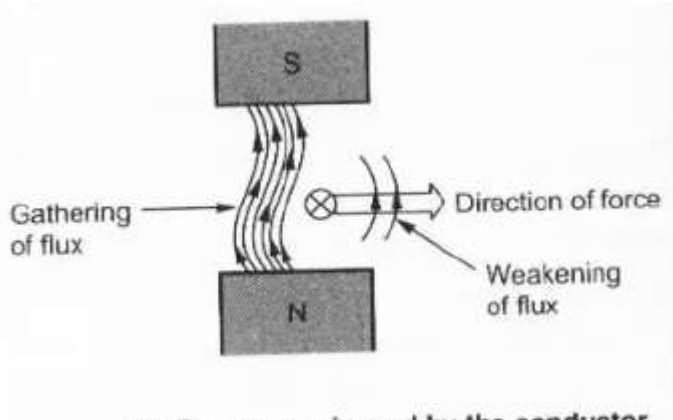

(b) Force experienced by the conductor

Back e.m.f.

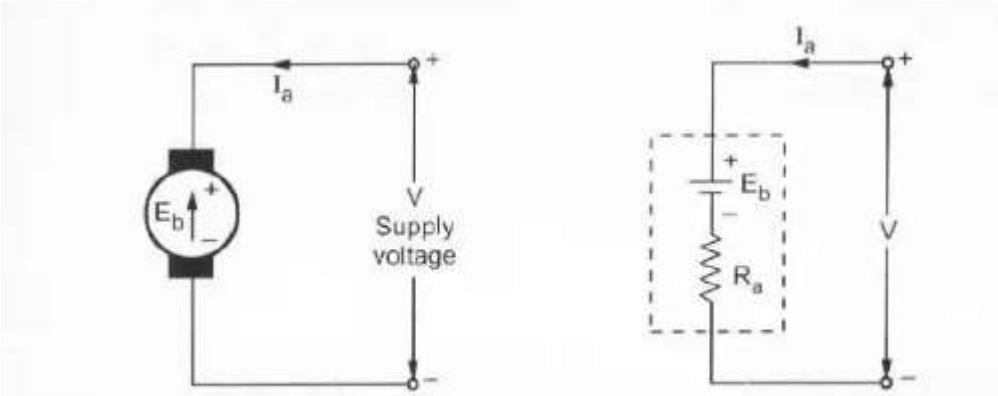

(a) Back e.m.f. in a d.c. Motor (b) Equivalent circuit

$$E_b = \frac{\phi P N Z}{60 A} \text{ volts}$$

Voltage Equation of a D.C. Motor

$$V = E_b + I_a R_a$$

$$I_a = \frac{V - E_b}{R_a}$$

Types of D.C. Motors

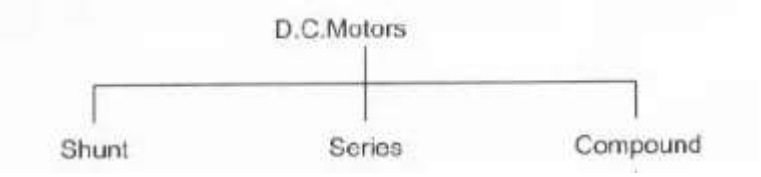

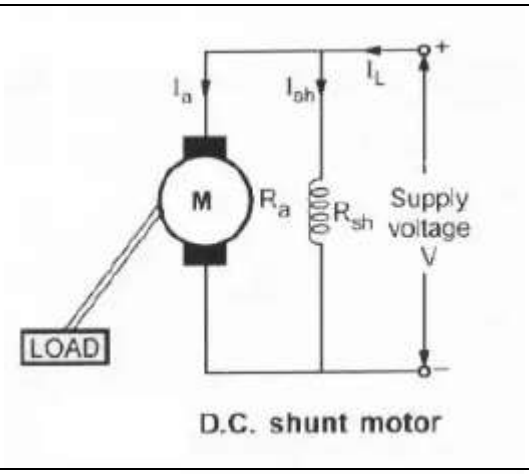

D.C. shunt motor

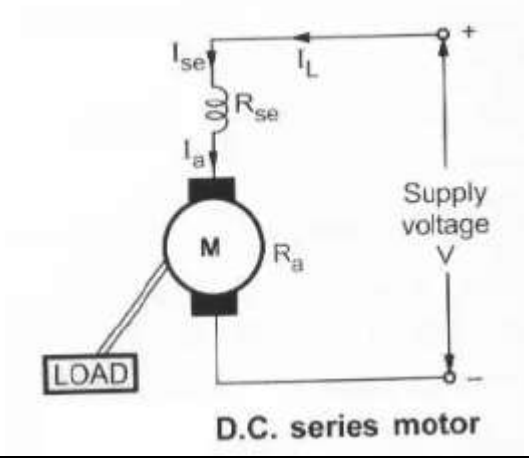

D.C. series motor

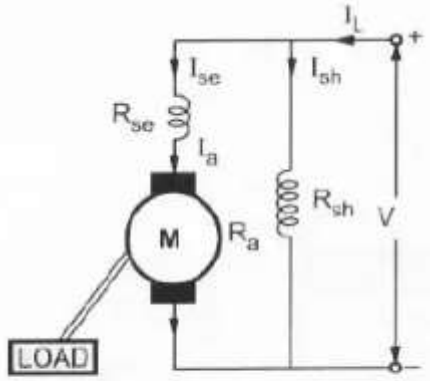

compound motor

Types of motor	Characteristics	Applications
Shunt	Speed is fairly constant and medium starting torque.	1) Blowers and fans 2) Centrifugal and reciprocating pumps 3) Lathe machines 4) Machine tools 5) Milling machines 6) Drilling machines
Series	High starting torque. No load condition is dangerous. Variable speed.	1) Cranes 2) Hoists, Elevators 3) Trolleys 4) Conveyors 5) Electric locomotives and electric traction.
Cumulative compound	High starting torque. No load condition is allowed.	1) Rolling mills 2) Punches 3) Shears 4) Heavy planers 5) Elevators

Brushless D.C. Motor

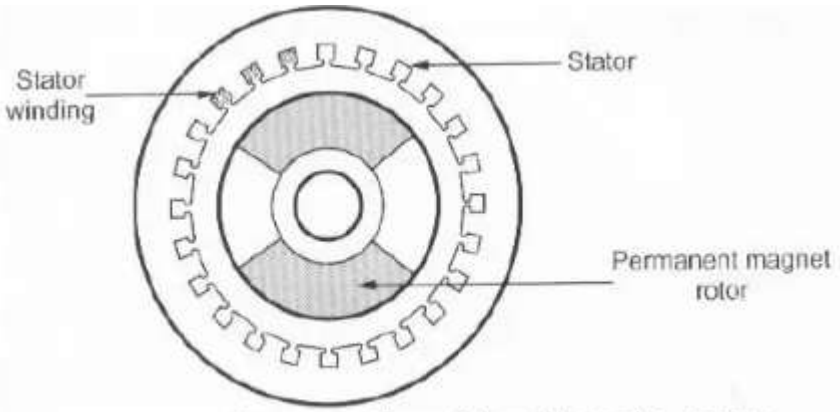

Cross-section of brushless d.c. motor

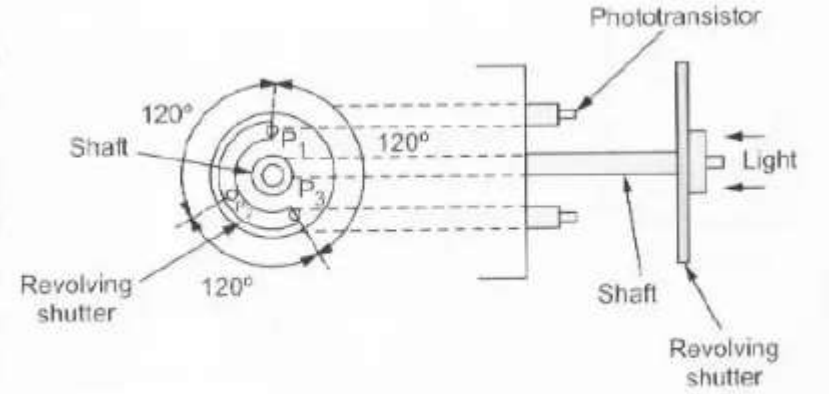

Arrangement of an optical sensor

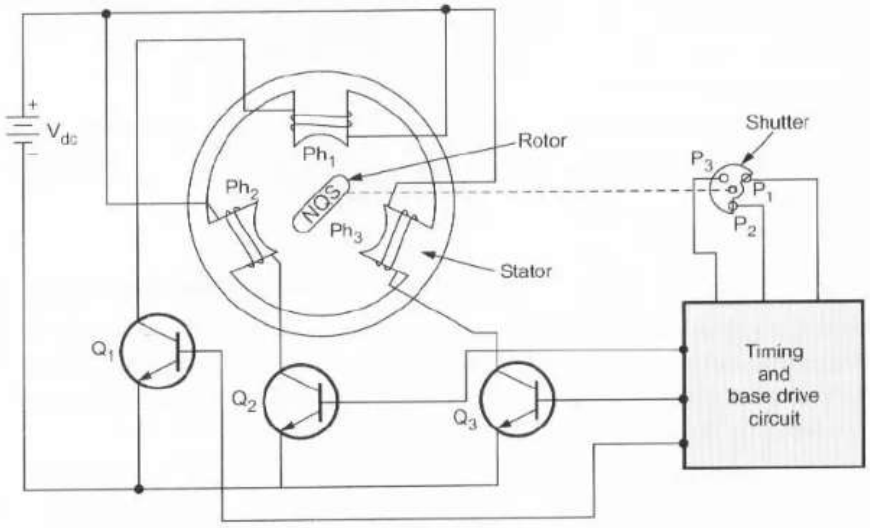

Schematic arrangement of unipolar brushless d.c. motor

Features of Brushless D.C. Motor

It has following features compared to conventional d.c. motors :

1. Due to absence of brushes and commutator, they require practically no maintenance.
2. They have long life.
3. The operation is highly reliable.
4. They have low inertia and friction.
5. They have low radio frequency interference and noise hence the operation is noiseless.
6. Due to low inertia and friction, they have a faster acceleration and can be run at much higher speeds upto 30000 r.p.m. and more.
7. Because armature windings are on stator, the cooling is much better.
8. Due to feedback diodes, the efficiency is as high as 75 to 80 %.

Applications of Brushless D.C. Motor

The unipolar brushless d.c. motors are used for the applications of power levels upto 100 W like turn table drives in record players, spindle drives in hard disk drives in computers and various low cost instruments and computer peripheral equipments.

The motors are also used for tape drive for video recorders, instruments and control systems.

They also have applications in the field of aerospace, gyroscope motors and biomedical instruments like artificial heart pumps.